PEDESTRIAN CROSSWALK SYSTEM

Solar-Powered BlinkerSign®

TRAFFIC SAFETY
SUPPLY COMPANY

20W/44Ah TOP-OF-POLE SELF-CONTAINED CONTROL CABINET

HOUSING	NEMA 3R type aluminum
SOLAR PANEL	20 watt
BATTERY	12V, up to 44Ah
BATTERY LIFESPAN	3 to 5 years, field replaceable
MOUNTING OPTIONS	Round poles: 2⅜" up to 4 ½"; Square posts: 1¾" up to 2½"
MOUNTING HARDWARE	Stainless steel hardware
WARRANTY	3-year limited battery warranty 5-year limited system warranty 10-year limited solar panel warranty

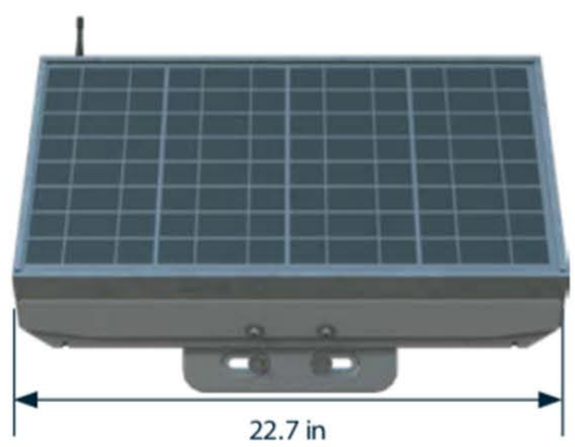

Front View

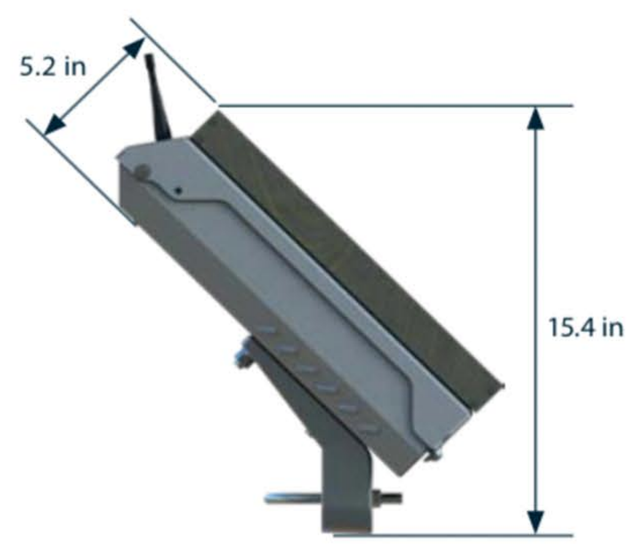

Side View

Back View

Copyright 2018, Traffic Safety Supply Company.
2324 SE Umatilla Street, Portland, OR 97202 / +1 503.235.8531 / TSSCO.COM

PEDESTRIAN CROSSWALK SYSTEM
Solar-Powered BlinkerSign®

TRAFFIC SAFETY SUPPLY COMPANY

BLINKERSIGN®

SIGN LEGEND	W11-2, W11-15 and S1-1 options available
SIGN SUBSTRATE	.080" highway grade aluminum
REFLECTIVE SHEETING	3M™ DG3 with anti-graffiti overlay
DIMMING	Variable based on photocell sensor input
FLASH PATTERN	MUTCD section 2A.07 compliant
LED TYPE	Environmentally-sealed, high-power 1 watt
LED COLOR	Amber
LED QUANTITY	8
LED LIFE EXPECTANCY	100,000 hours
VISIBILITY	Daytime: more than 1,000 feet Nighttime: more than 1 mile
ENCLOSED CHANNELS	Protect wiring against inclement weather, tampering and vandalism
MOUTING BRACKETS	Single post standard. Double post or Z-bar available
MOUNTING HARDWARE	Various options available
WIND LOAD RATING	Up to 90 mph*
OPERATING TEMPERATURE RANGE	-40˚ F to 122˚F (-40˚C to 50˚ C)
DIMENSIONS	24"W x 24"H x 1"D 30"W x 30"H x 1"D 36"W x 36"H x 1"D

** Dependent upon pole size and system arrangement*

BLINKERBEAM® WIRELESS COMMUNICATION

FREQUENCY	900 MHz FHSS (Frequency Hopping Spread Spectrum)
RANGE	900 feet (radio site survey recommended)
CONNECTIVITY	Crosswalk and optional advanced warning LEDs activate concurrently

ACTIVATIONS

PUSH BUTTON ACTIVATION	ADA push button, typical (<120 millisecond)
USER-ACTUATED PUSH BUTTON	XAV2-LED or Bulldog 300, 20-second daily activations minimum
PASSIVE DETECTION	Wireless bollards
AUTONOMY	23-day minimum

BLINKERBEAM® WIRELESS

BlinkLink®	Optional cloud software with cellular modem**

*** Dependent upon system configuration*

W11-2 BLINKERSIGN®

BLINKERBEAM® WIRELESS RADIO

XAV2-LED PUSH BUTTON

BULLDOG PUSH BUTTON